1/10/2014 11:01:04 AM

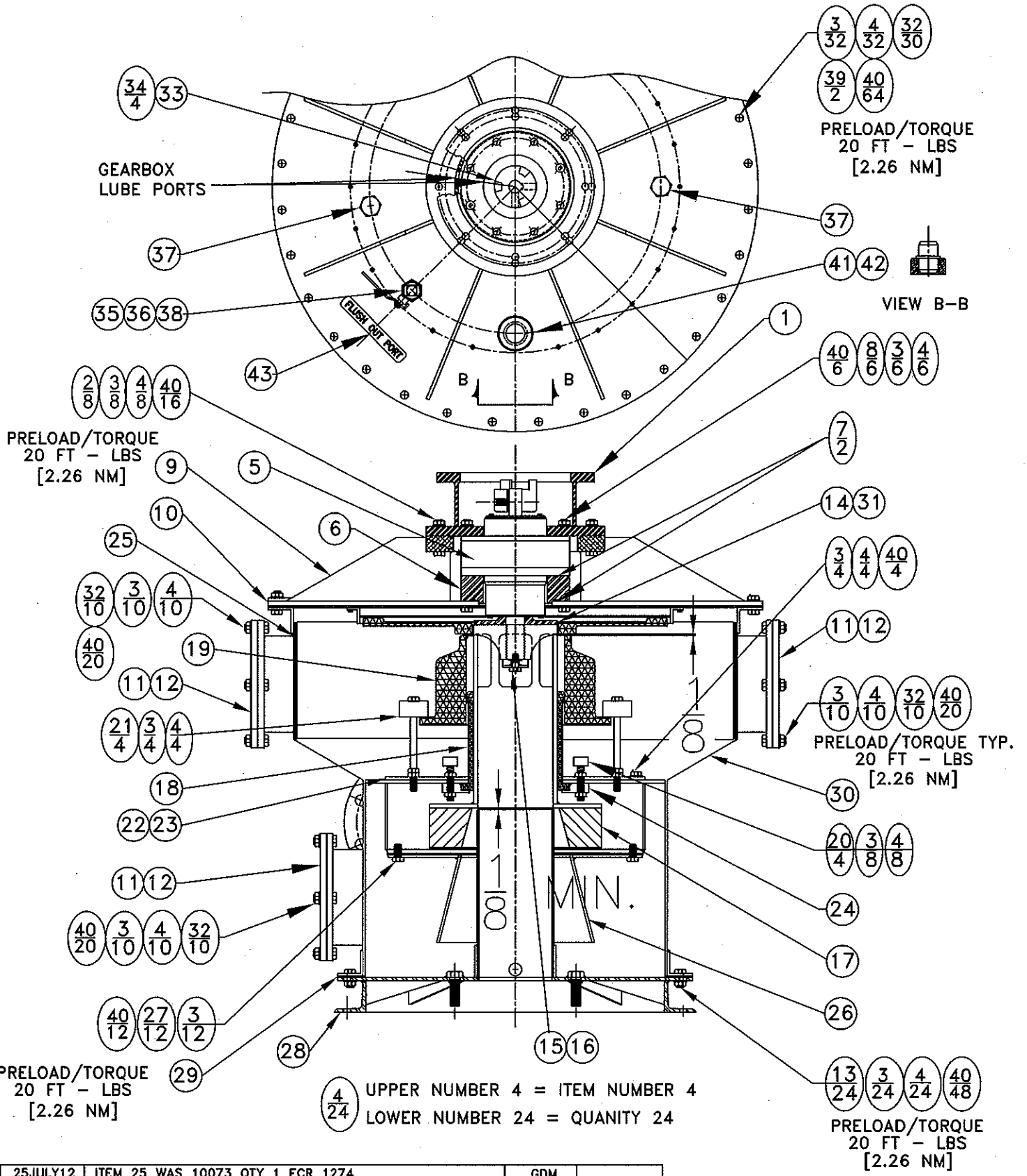

REV.	DATE	DESCRIPTION	BY	CHECKED
E	25JULY12	ITEM 25 WAS 10073 QTY 1 ECR 1274	GDM	
D	02 SEPT 11	ITEM 28 WAS 11310; ADD PRELOAD; ECR # 1251–2	GDM	
C	20 APR 10	ADD 1/8 GAP & REARRANGE PER ECR # 1213	GDM	
B	26 JULY 06	ADD 1/8 GAP & CHANGES PER ECR # 940	GDM	
A	26 OCT 05	ADD TOP VIEW, ITEM 37 QTY WAS 1 ECR # 856	GDM	

EST. WT. 780

BURGESS MANUFACTURING, LTD.

THIS DOCUMENT, WHETHER CONTAINING PATENTABLE OR NONPATENTABLE SUBJECT MATTER, EMBODIES THE PROPRIETARY AND CONFIDENTIAL INFORMATION OF BURGESS MANUFACTURING, LTD. IT IS LOANED IN CONFIDENCE WITH THE UNDERSTANDING THAT IT WILL NOT BE REPRODUCED, USED OR DISCLOSED FOR ANY PURPOSE EXCEPT THE LIMITED PURPOSE FOR WHICH IT IS LOANED. THIS DOCUMENT SHALL BE RETURNED TO BURGESS MANUFACTURING, LTD. UPON DEMAND.

BURGESS DEGASSERS

TITLE: SECTION, DEGASSER MUD HANDLING
PAD & BOTTOM MOUNTED W/ 3 X 13 1/2 IMPELLER F/ 60 HZ MOTOR

DRAWN BY:	DATE:	DWG NO.
GDM	21 FEB 05	11845
SCALE: NONE	APP'D:	